Palm-NAV mount system wiring 4/00

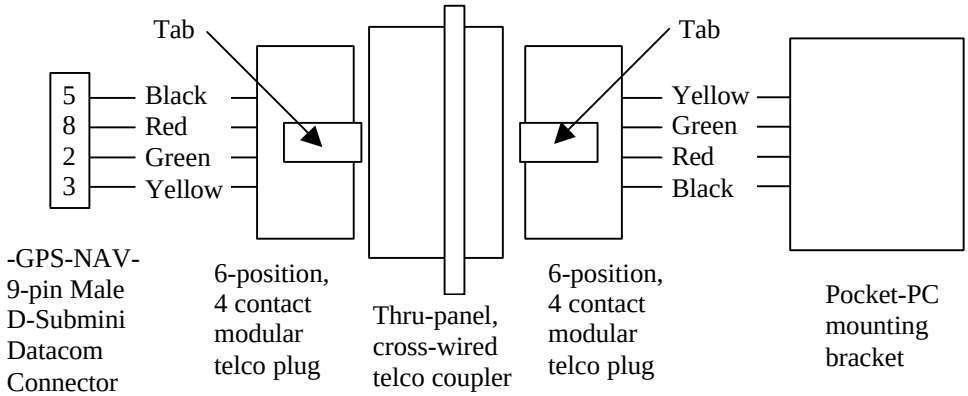

Datacom Pin #	Telco Wire Color	Wire Function
5	Black	Power and logic ground
8	Red	+5 volt power to Pocket-PC
2	Green	Data from GPS-NAV to Pocket-PC
3	Yellow	Data from Pocket-PC to GPS-NAV